TURBOGAZ

PUBLIC JOINT STOCK COMPANY

Leader in turbo-expander hardware production

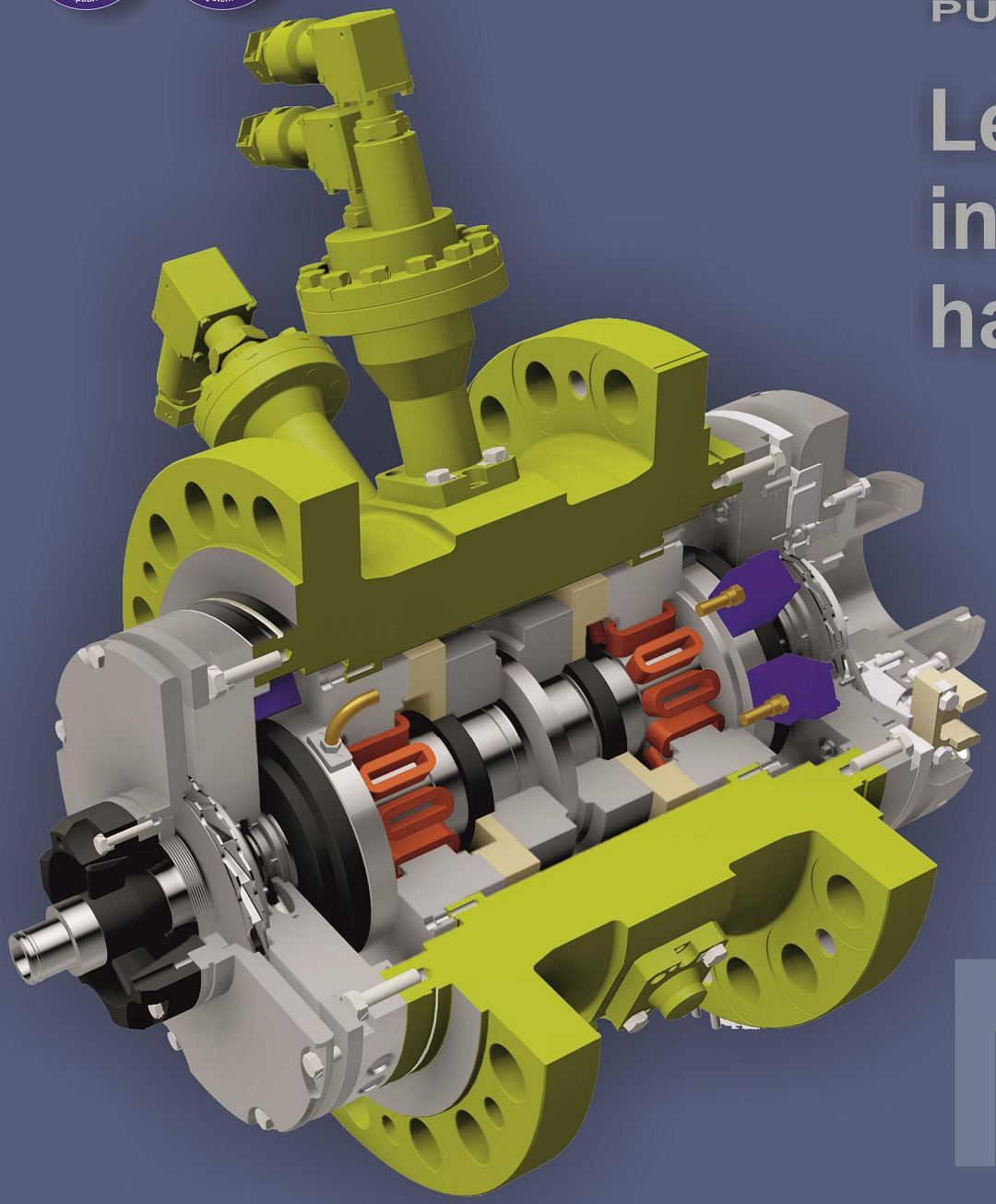

NTDA

TURBOGAZ
PUBLIC JOINT STOCK COMPANY

Design and implementation of turbo-expander units (TE) at gas treatment plants are one of the PJSC “Turbogaz” profile activities.

TE are designed to cool gas at the expense of more efficient utilization of excessive gas pressure at a turbine in comparison with pressure regulators working on the Joule-Thompson effect. Depending on different hook-up schemes TE can solve the following tasks:

- Cooling gas down to the condensate liquefaction point (temperatures in the range of minus 30 ... minus 33 ºC) as well as to the liquefaction point of propane-butane fractions (temperatures in the range of minus 55 ... minus 80 ºC), when working in combination with recuperators;
- Cooling gas down to 0 ... minus 2 ºC in High North climatic conditions when transporting gas in the permafrost environment. TE are installed by the diagram: TE compressor → air cooler →turbine, which also ensures soil unthawing around the pipeline.

PJSC “Turbogaz” has designed and made commercially available TE of the capacities ranging from 0.5 to 40 mln.m^3/day at pressures up to 20 MPa.

TE are designed to work with a wide range of gas compositions including also the work with associated gas and gas with liquid fluid content up to 5 g/Nm^3 as well as with gas containing solids up to 0.1 g/Nm^3 , and with associated gas having H_2S and CO_2 content. Depending on the input parameters turbo-expander units are designed and produced in a number of principally different embodiments:

- TE with turbo-expander rotor on rolling bearings with simplified lube oil system for the cases, when available pressure drop at the turbine is low (Pt < 1.4) and correspondingly the speed is relatively low (up to 10,000 rpm). After applying high precision rolling bearings the turbo-expander repair-free service life has increased up to 16,000 hours;
- TE on sleeve bearings or on active magnetic bearings for the cases, when pressure drops at the turbine are high (Pt > 1.4) and correspondingly the TE rotor speeds are high. Five-segment carrier bearings as well as tilling thrust bearings (of Mitchell type) are used as sleeve bearings.

Sleeve bearings application requires developed lube oil system and cooling system. Therefore TE design is modified to add an oil tank, pumps, filters, pressure drop regulators, hydraulic accumulator, supplementary shut-off valves, oil-coolers, etc.

When using S2M active magnetic bearings (AMB) the lube oil system becomes totally unnecessary, this reduces maintenance costs and provides for TE environmental friendliness.

System of protective buffer gas preparation has been designed to protect AMB and TE rotor position sensors from sour gas. The same system also ensures AMB cooling.

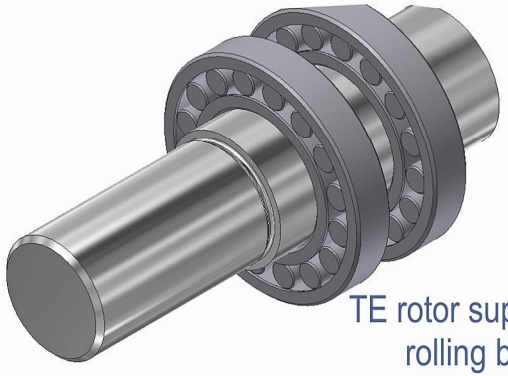

TE rotor support on rolling bearings

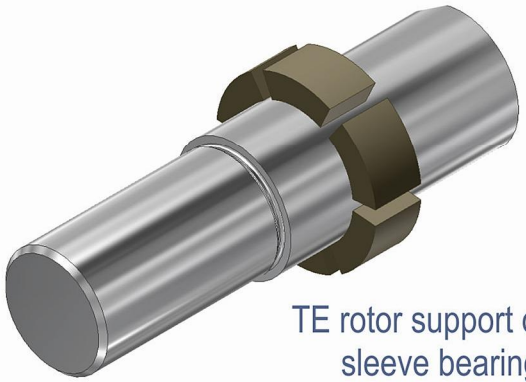

TE rotor support on sleeve bearings

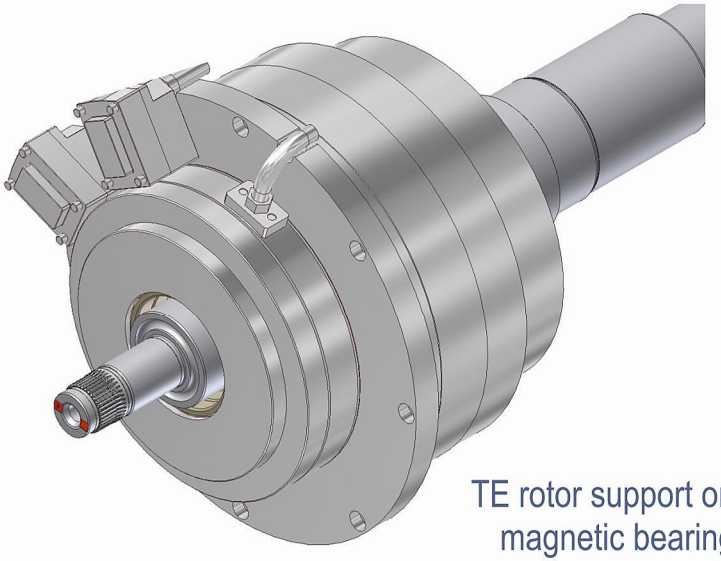

TE rotor support on magnetic bearing

TURBOGAZ
PUBLIC JOINT STOCK COMPANY

Low-temperature turbo-expander unit NTDA-2.4-6.4-UHL4. Yulievskiy field (Ukriane). Since 2003. Sleeve bearings

Name	Gas cons., mln. m^3/d	Shaft power, kW	Start year, aver. runtime, h	Nuber of units (rotor bearing type)	Expander						Compressor					
					Pin, MPa	Pout MPa,	Tin, °C	Tout, °C	Din, mm	Dout, mm	Pin, MPa	Pout, MPa	Tin, °C	Tout, °C	Din, mm	Dout, mm
NTDA-2.4-6.4-UHL4 Yulievskiy field, Kharkovgazdobycha, Ukraine	2,4	884	2003 42520 h.	1 (SB)	6,4	3,24	-27,7	-60,3	200	200	3,2	3,7	41,0	59,6	300	300

TURBOGAZ
PUBLIC JOINT STOCK COMPANY

Turbo-expander unit TDA-4.9-6.8-U1.
Kokdumalak field (Uzbekistan). Since 2006. Sleeve bearings

Name	Gas cons., mln. m^3/d	Shaft power, kW	Start year, aver. runtime, h	Nuber of units (rotor bearing type)	Expander						Compressor					
					Pin, MPa	Pout Mpa,	Tin, °C	Tout, °C	Din, mm	Dout, mm	Pin, MPa	Pout, MPa	Tin, °C	Tout, °C	Din, mm	Dout, mm
TDA-4.9-6.8-U1 Kokdumalak field Uzbekistan	4,9	1091	2006 49474 h.	4 (SB)	6,94	5,0	8,0	-10	300	300	4,75	5,55	41,0	54,4	300	300

TURBOGAZ
PUBLIC JOINT STOCK COMPANY

Turbo-expander units TDA-4.0-3.0-1-U2.
Krestische field, Ukraine. Since 2004. Rolling bearings

TURBOGAZ
PUBLIC JOINT STOCK COMPANY

Unit size and terminal points. TDA-4.0-3.0-1-U2

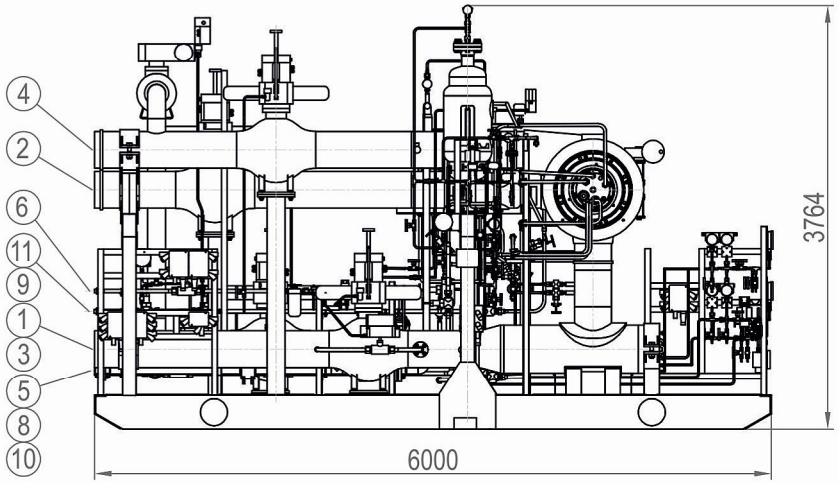

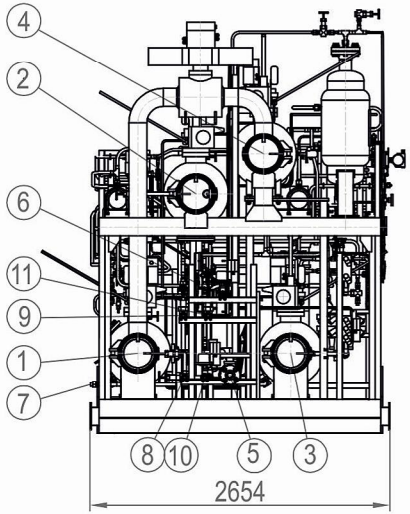

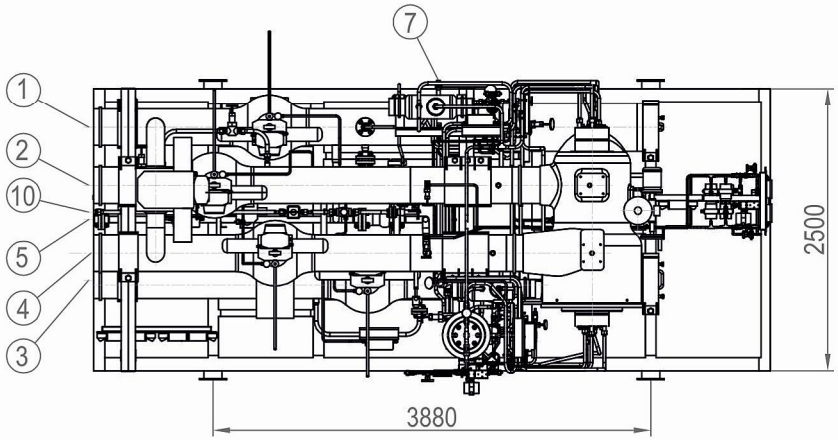

1. Gas input into turbine
2. Gas output from turbine
3. Gas input into compressor
4. Gas output from compressor
5. Gas bleed to flare
6. Methanol feeding
7. Drainage
8. Heat transfer fluid (HTF) feeding
9. HTF drainage
10. Oil feeding
11. Instrument gas feeding
12. Oil drainage

Name	Gas cons., mln. m^3/d	Shaft power, kW	Start year, aver. runtime, h	Nuber of units (rotor bearing type)	Expander						Compressor					
					Pin, MPa	Pout Mpa,	Tin, °C	Tout, °C	Din, mm	Dout, mm	Pin, MPa	Pout, MPa	Tin, °C	Tout, °C	Din, mm	Dout, mm
TDA-4.0-3.0-1-U2. Krestische field, Ukraine	4	1460,5	2004 41200 h.	3 (RB)	3,11	2,7	13,5	6,8	300	300	2,38	2,62	38,0	42,4	300	300

TURBOGAZ
PUBLIC JOINT STOCK COMPANY

Single-piece turbo-expander unit MTDA-0.5-3.8-MP-U2.
“Shidna Poltava” field, Ukraine. Since 2009. Active magnetic bearing

TURBOGAZ
PUBLIC JOINT STOCK COMPANY

Unit size and terminal points. MTDA-0.5-3.8-MP-U2

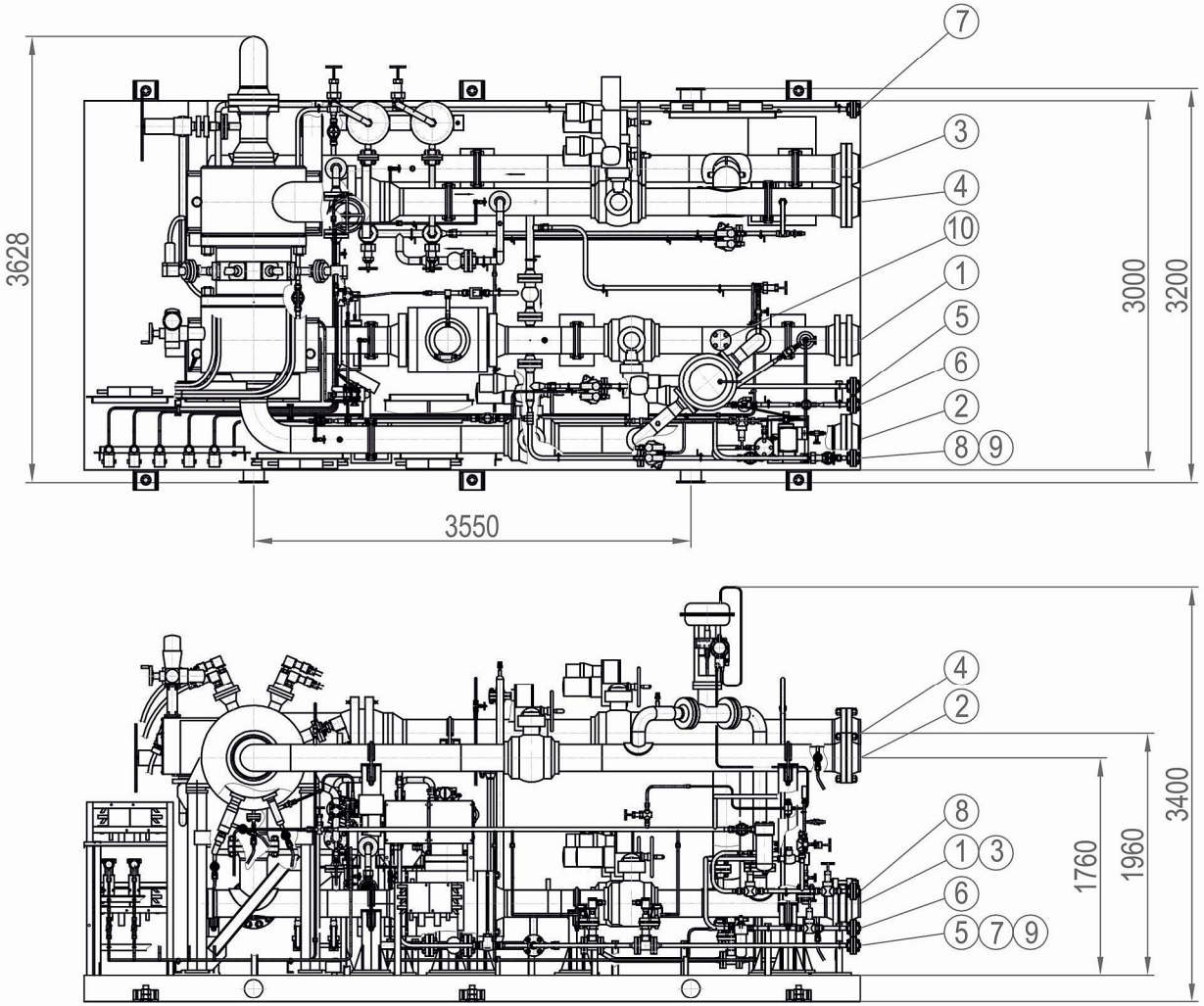

1. Gas input into turbo-expander
2. Gas output from turbo-expander
3. Gas input into compressor
4. Gas output from compressor
5. Gas bleed to flare
6. Hydrate growth inhibitor feeding
7. Drainage
8. Instrumentation air feed
9. Flare
10. Steam cleaning

Name	Gas cons., mln. m³/d	Shaft power, kW	Start year, aver. runtime, h	Nuber of units (rotor bearing type)	Expander						Compressor					
					Pin, MPa	Pout Mpa,	Tin, °C	Tout, °C	Din, mm	Dout, mm	Pin, MPa	Pout, MPa	Tin, °C	Tout, °C	Din, mm	Dout, mm
MTDA-0.5-3.8-MP-U2 Sh.Poltava field, Poltavagazdobycha, Ukraine	0,585-0,387	124	2009 27770 h.	1 (AMB)	3,88	2,9-3,2	-23...-14	-30	200	200	2,79-3,0	3,15-3,3	-6	0...30	200	200

TURBOGAZ
PUBLIC JOINT STOCK COMPANY

Turbo-expander unit MTDA-1.2-3.2-MP-U2.
“Mashevka” field, Ukraine. Since 2009. Active magnetic bearing

TURBOGAZ
PUBLIC JOINT STOCK COMPANY

Unit size and terminal points. MTDA-1.2-3.2-MP-U2

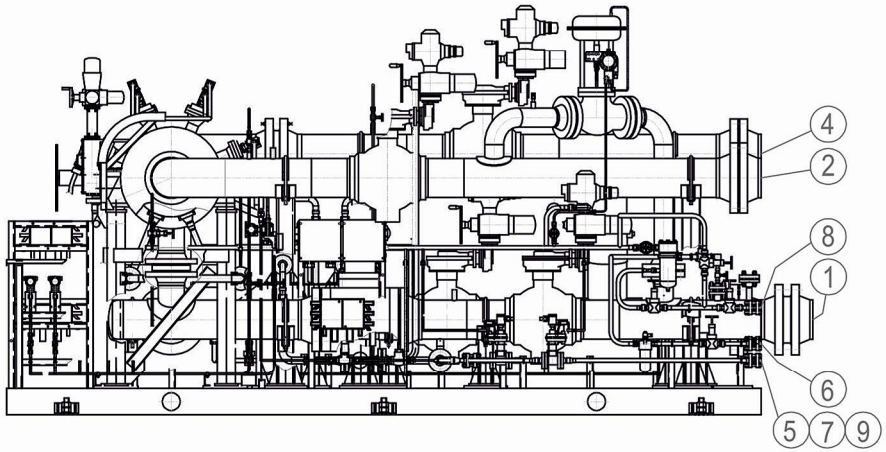

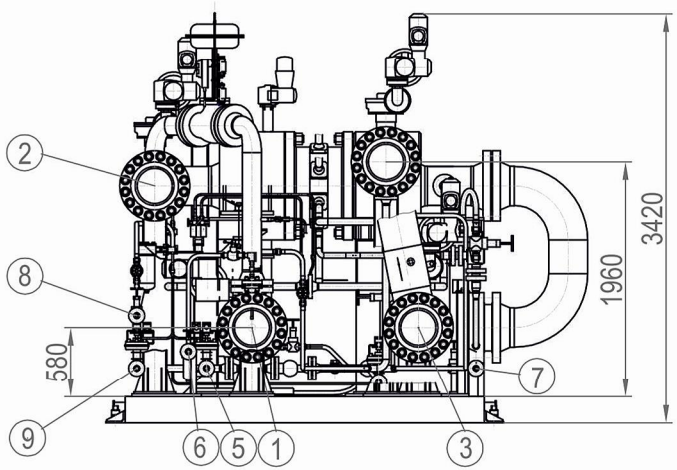

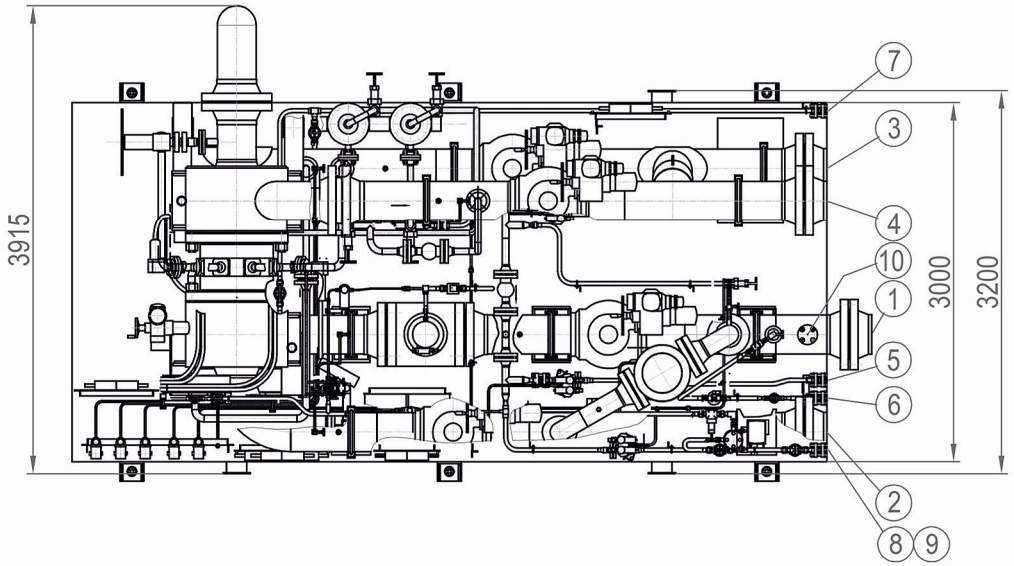

1. Gas input into turbo-expander
2. Gas output from turbo-expander
3. Gas input into compressor
4. Gas output from compressor
5. Gas bleed to flare
6. Hydrate growth inhibitor feeding
7. Drainage
8. Instrumentation air feed
9. Flare
10. Steam cleaning

Name	Gas cons., mln. m^3/d	Shaft power, kW	Start year, aver. runtime, h	Nuber of units (rotor bearing type)	Expander						Compressor					
					Pin, MPa	Pout Mpa,	Tin, °C	Tout, °C	Din, mm	Dout, mm	Pin, MPa	Pout, MPa	Tin, °C	Tout, °C	Din, mm	Dout, mm
MTDA-1.2-3.2-MP-U2 Mashevka field, Poltavagazdobycha, Ukraine	1,2-0,76	185	2009 32564 h.	1 (AMB)	3,2	2,56	-17...-15	-29...-25	200	300	2,5-2,3	2,8-2,6	1...30	10...40	300	300

TURBOGAZ
PUBLIC JOINT STOCK COMPANY

Turbo-expander unit MTDA-2.9-6.8-MP-U1.
“Zevardy” field, Uzbekistan. Since 2008. Active magnetic bearing

TURBOGAZ
PUBLIC JOINT STOCK COMPANY

Unit size and terminal points. MTDA-2.9-6.8-MP-U1.

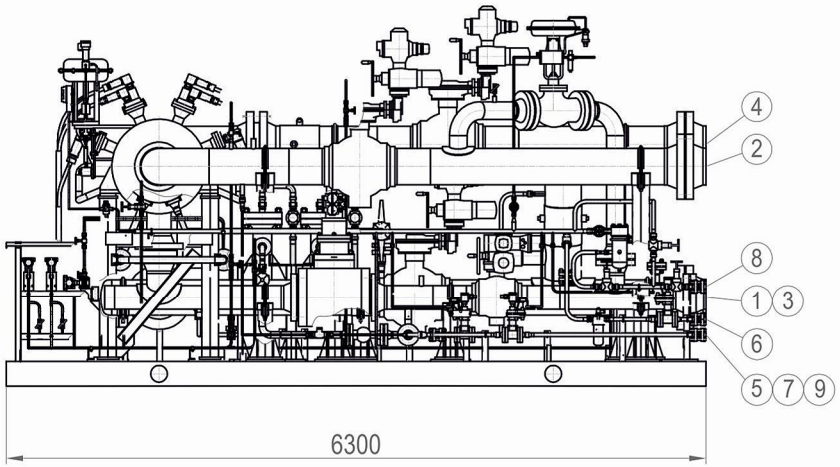

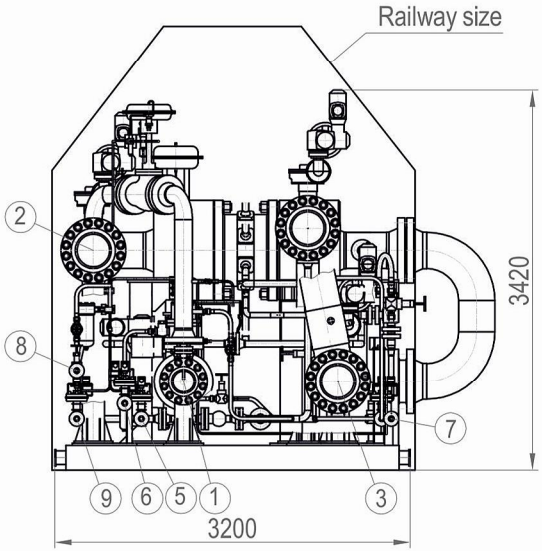

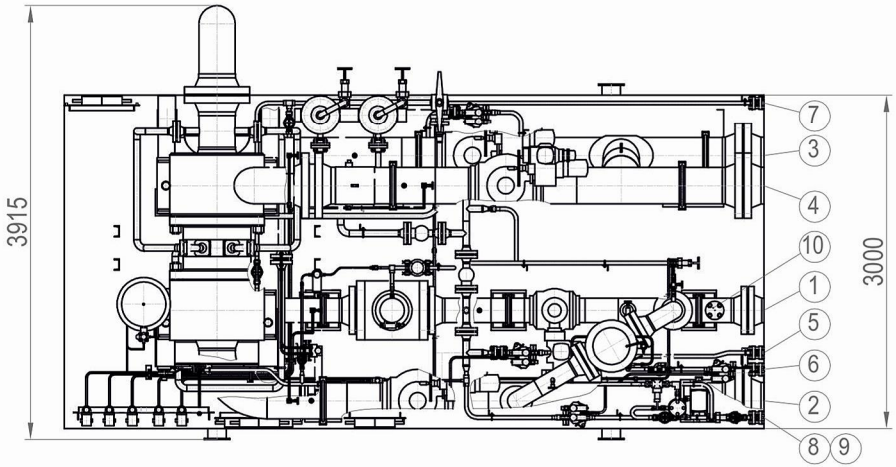

1.Gas input into turbo-expander
2.Gas output from turbo-expander
3. Gas input into compressor
4.Gas output from compressor
5.Gas bleed to flare
6.Hydrate growth inhibitor feeding
7.Drainage
8.Instrumentation air feed
9.Flare
10.Steam cleaning

Name	Gas cons., mln. m^3/d	Shaft power, kW	Start year, aver. runtime, h	Nuber of units (rotor bearing type)	Expander						Compressor					
					Pin, MPa	Pout Mpa,	Tin, °C	Tout, °C	Din, mm	Dout, mm	Pin, MPa	Pout, MPa	Tin, °C	Tout, °C	Din, mm	Dout, mm
MTDA-2.9-6.8-MP-U1 Zevardy field, Uzbekistan	2,9	675,5	2008 34312 h.	4 (AMB)	6,94	5,0	8,0	-10	200	300	4,75	5,55	41,0	54,4	300	300

TURBOGAZ
PUBLIC JOINT STOCK COMPANY

Turbo-expander unit MTDA-3.0-10.4-MP-U2.
“Timofeyevka” field, Ukraine. Since 2010. Active magnetic bearing

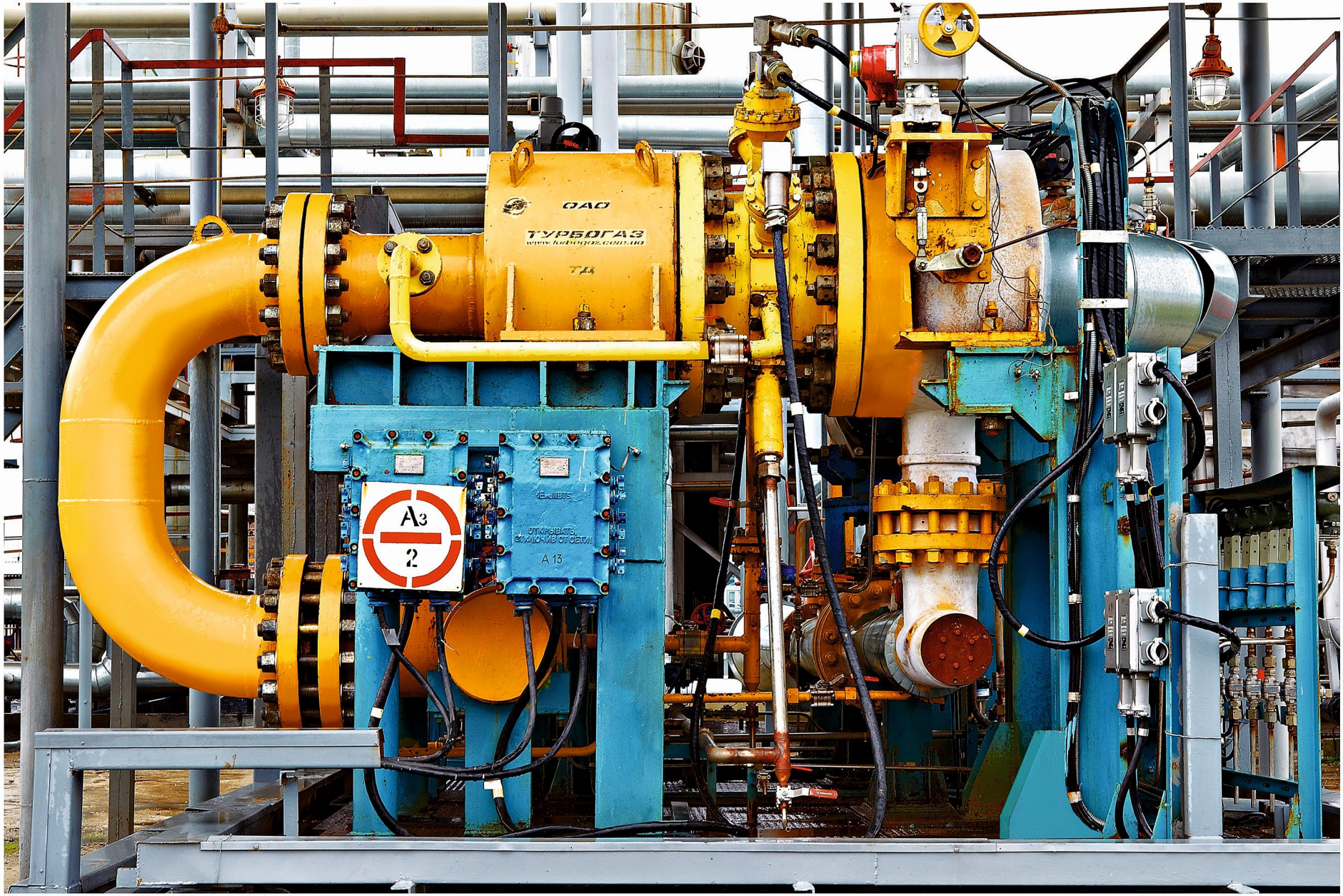

TURBOGAZ
PUBLIC JOINT STOCK COMPANY

Unit size and terminal points. MTDA-3.0-10.4-MP-U2.

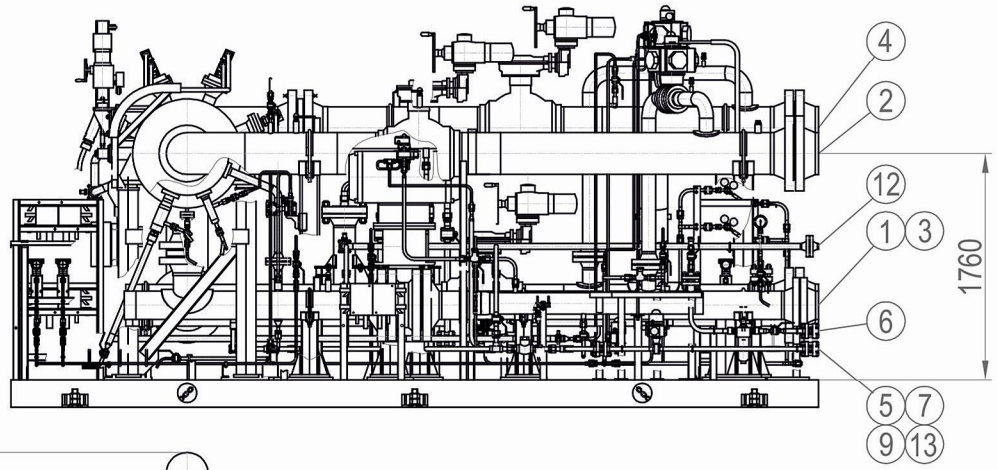

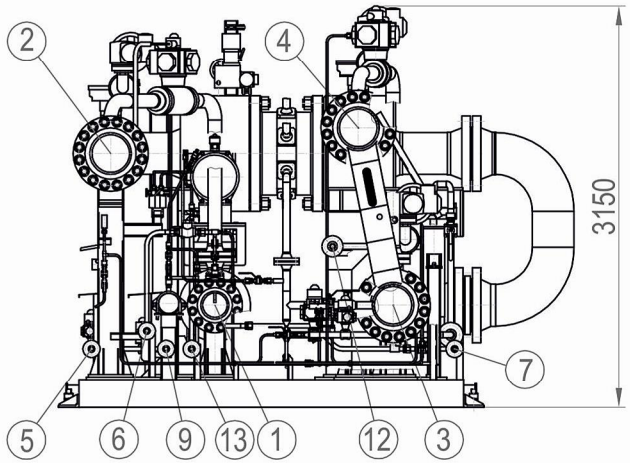

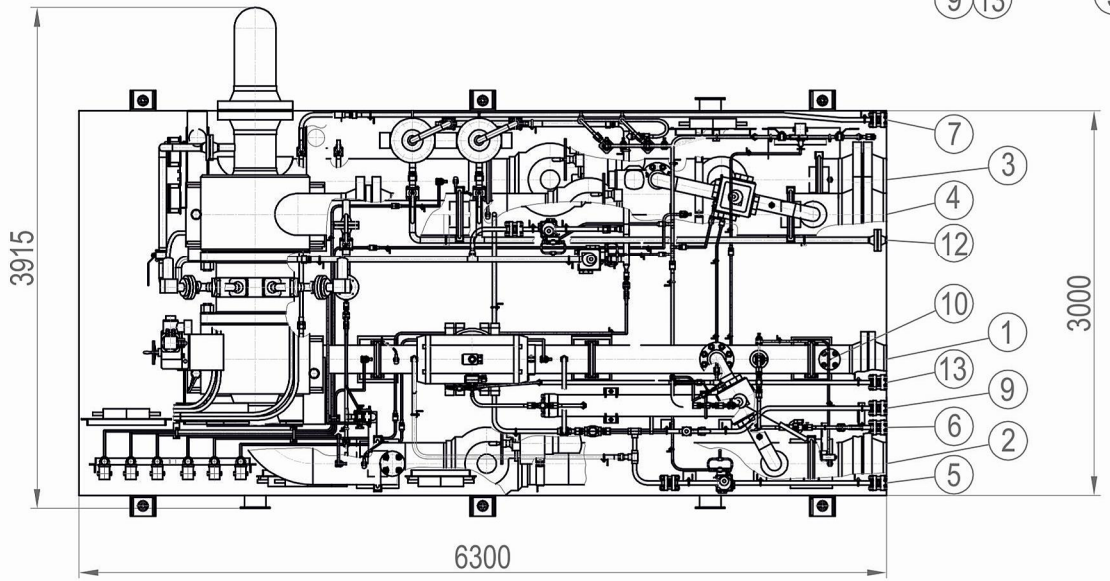

1.Gas input into turbo-expander
2.Gas output from turbo-expander
3. Gas input into compressor
4.Gas output from compressor
5.Gas bleed to flare
6.Hydrate growth inhibitor feeding
7.Drainage
9,13 Drainage
10. Steam cleaning
12.Cooling gas feed

Name	Gas cons., mln. m^3/d	Shaft power, kW	Start year, aver. runtime, h	Nuber of units (rotor bearing type)	Expander						Compressor					
					Pin, MPa	Pout Mpa,	Tin, °C	Tout, °C	Din, mm	Dout, mm	Pin, MPa	Pout, MPa	Tin, °C	Tout, °C	Din, mm	Dout, mm
MTDA-3.0-10.4-MP-U2. “Timofeyevka” field, Ukraine	3,3-2,1	1162	2010 21250 h.	1 (AMB)	10,1-8,1	5,1	9...-5	-30	200	300	4,9	5,7	5...15	20...30	300	300

TURBOGAZ
PUBLIC JOINT STOCK COMPANY

Turbo-expander unit MTDA-4.9-6.9-MP-U1.
“Alan” field, Uzbekistan. Since 2012. Active magnetic bearing

TURBOGAZ
PUBLIC JOINT STOCK COMPANY

Unit size and terminal points. Turbo-expander unit MTDA-4.9-6.9-MP-U1.

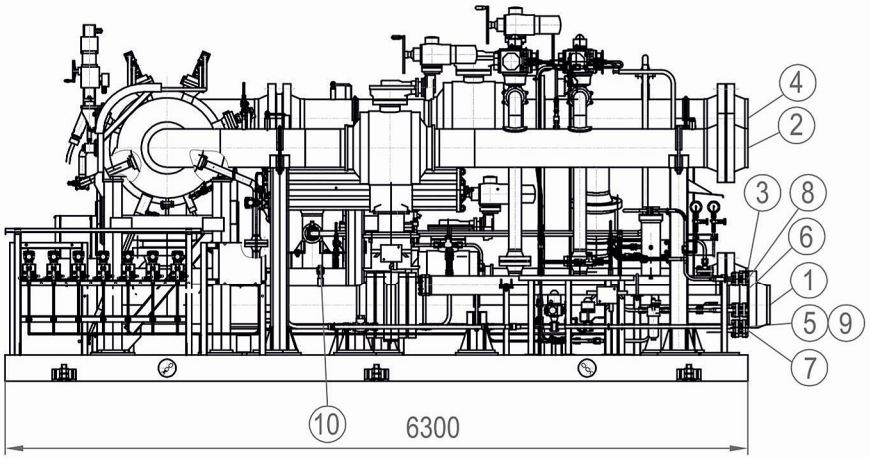

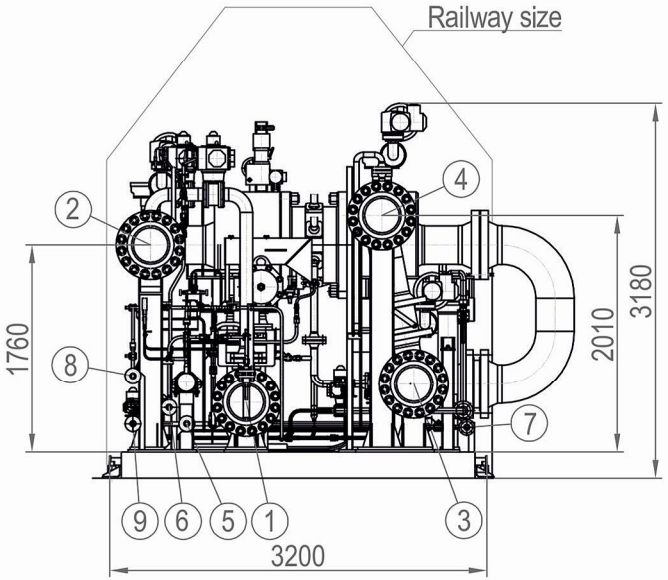

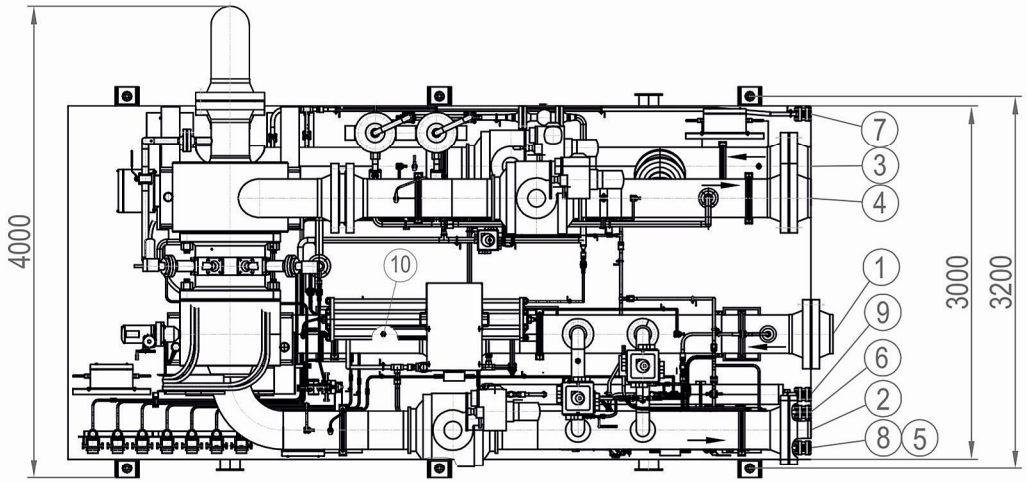

1.Gas input into turbo-expander
2.Gas output from turbo-expander
3.Gas input into compressor
4.Gas output from compressor
5.Gas bleed to flare
6.Hydrate growth inhibitor feeding
7.Drainage
8.Instrumentation air feed
9.Flare
10.Steam cleaning

Name	Gas cons., mln. m^3/d	Shaft power, kW	Start year, aver. runtime, h	Nuber of units (rotor bearing type)	Expander						Compressor					
					Pin, MPa	Pout Mpa,	Tin, °C	Tout, °C	Din, mm	Dout, mm	Pin, MPa	Pout, MPa	Tin, °C	Tout, °C	Din, mm	Dout, mm
MTDA-4,9-6,9-MP-U1, «Alan» field Uzbekistan	4,9	1110	2012	1 (AMB)	6,9	5,0	10,0	-10	300	300	4,74	5,6	23,6	38	300	300

TURBOGAZ
PUBLIC JOINT STOCK COMPANY

Turbo-expander unit MTDA-8.0-12.6-MP-UXL4.
“Vankor” field, Russia. Active magnetic bearing

TURBOGAZ
PUBLIC JOINT STOCK COMPANY

Unit size and terminal points. Turbo-expander unit MTDA-8.0-12.6-MP-UXL4.

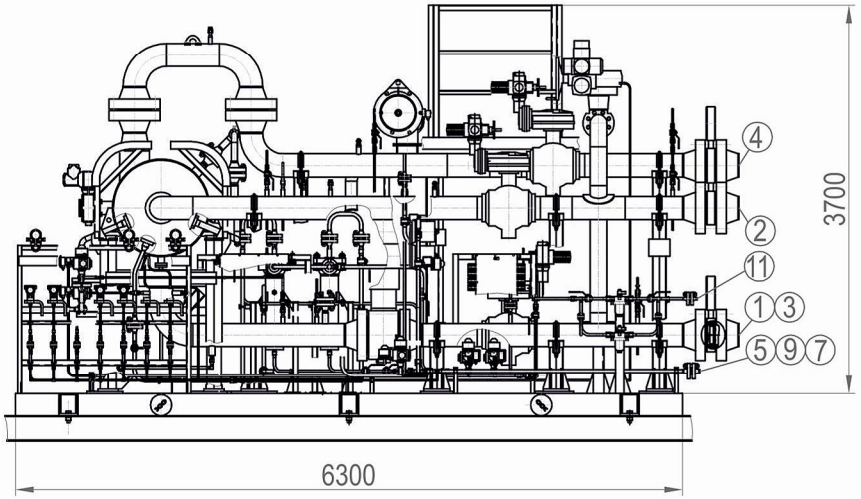

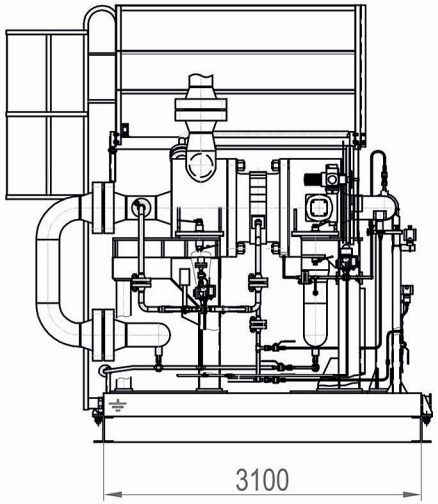

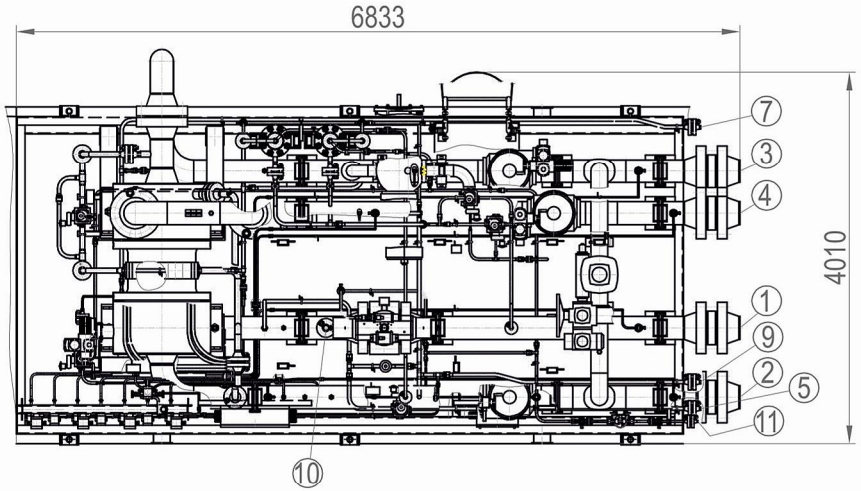

1.Gas input into turbo-expander
2.Gas output from turbo-expander
3. Gas input into compressor
4.Gas output from compressor
5.Gas bleed to flare
7.Drainage
9.Flare
10.Steam cleaning
11.Instrumentation air feed

Name	Gas cons., mln. m^3/d	Shaft power, kW	Start year, aver. runtime, h	Nuber of units (rotor bearing type)	Expander						Compressor					
					Pin, MPa	Pout, MPa	Tin, °C	Tout, °C	Din, mm	Dout, mm	Pin, МПа	Pout, МПа	Tin, °C	Tout, °C	Din, mm	Dout, mm
MTDA-8.0-12.6-MP-UKHL4. Promavtomatica, Russia	8	3200		3 (AMB)	16,94	8,5	17	-22,5	200	200	12,58	17,1	35,4	61	200	200

TURBOGAZ
PUBLIC JOINT STOCK COMPANY

Turbo-expander unit NTDA-9.0-4.5-U1.
“Shurtan” field, Uzbekistan. Since 2007. Active magnetic bearing.

TURBOGAZ
PUBLIC JOINT STOCK COMPANY

Unit size and terminal points. Turbo-expander unit MTDA-9.0-4.5-U1.

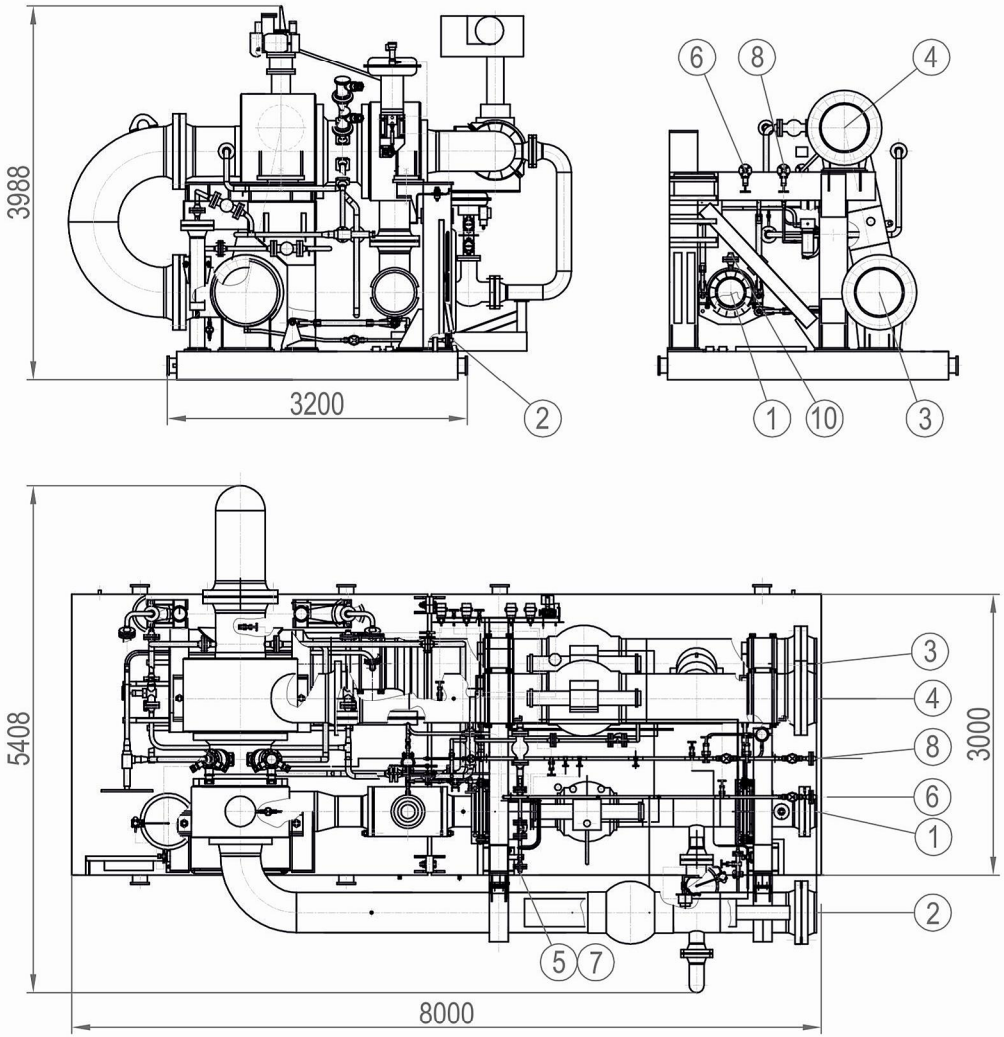

1. Gas input into turbo-expander
2. Gas output from turbo-expander
3. Gas input into compressor
4. Gas output from compressor
5. Gas bleed to flare
6. Instrument gas feed
7. Gas feed to flare
8. Instrumentation air feed
10. Steam cleaning

Name	Gas cons., mln. m^3/d	Shaft power, kW	Start year, aver. runtime, h	Nuber of units (rotor bearing type)	Expander						Compressor					
					Pin, MPa	Pout, MPa	Tin, °C	Tout, °C	Din, mm	Dout, mm	Pin, МПа	Pout, МПа	Tin, °C	Tout, °C	Din, mm	Dout, mm
NTDA-9.0-4.5-U1. “Shurtan” field, Uzbekistan	9,0	2054	2007 34838 h.	1 (AMB)	4,44	2,69	-53,7	-75,2	300	400	2,49	2,9	38,5	52,3	500	500

TURBOGAZ
PUBLIC JOINT STOCK COMPANY

Turbo-expander unit TDA-25.0-10.0-MP-UXL4.

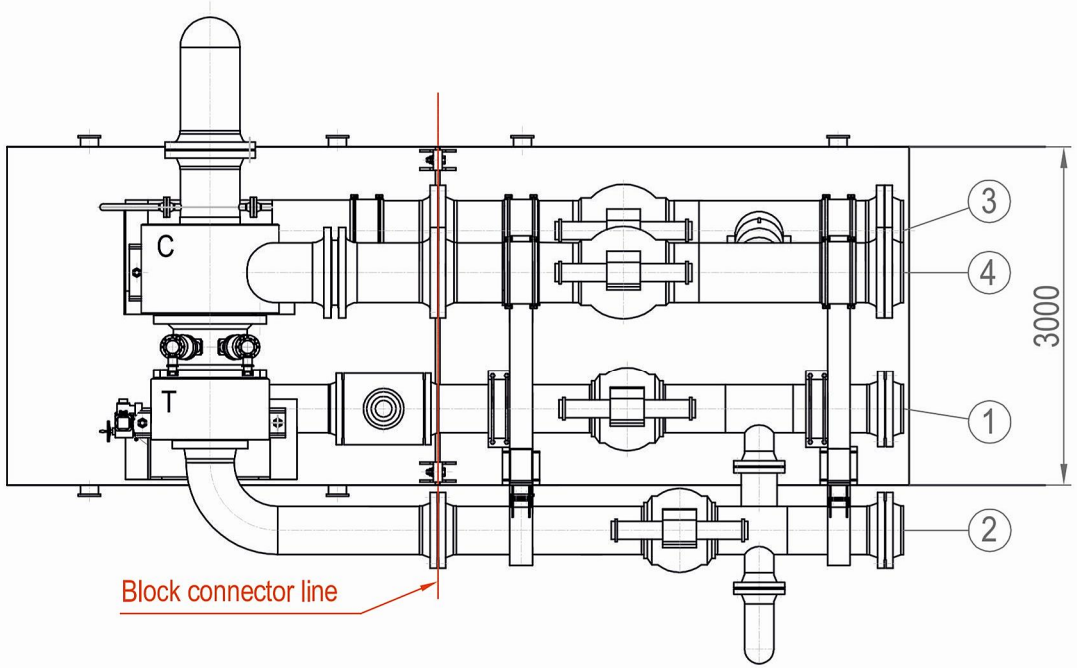

1.Gas input into turbo-expander Dc=400mm, Pc=10.0MPa
2.Gas output from turbo-expander Dc=400mm, Pc=10.0MPa
3.Gas input into compressor Dc=500mm, Pc=10.0MPa
4.Gas output from compressor Dc=500mm, Pc=10.0MPa

T - Turbine
C - Compressor

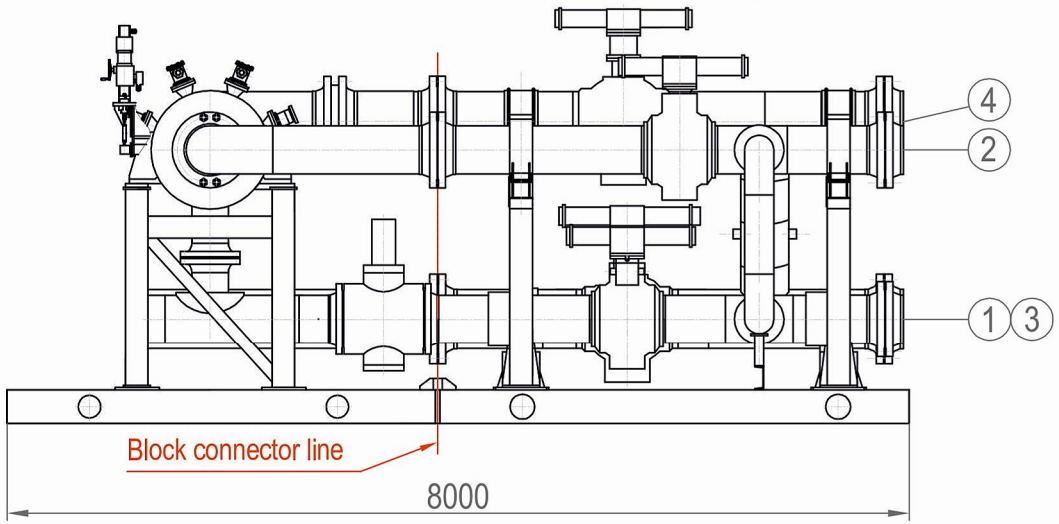

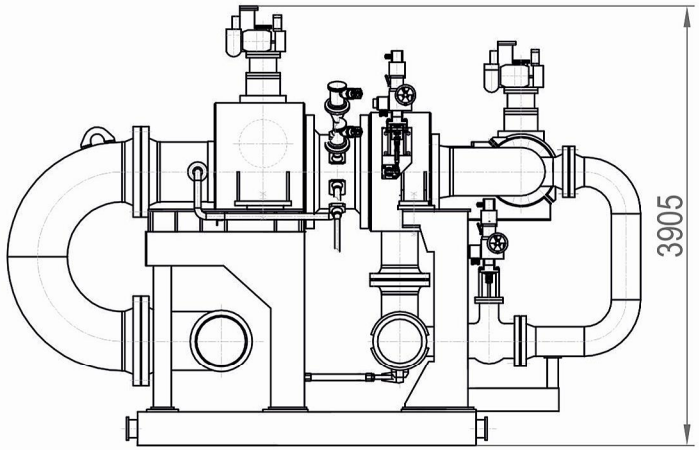

TURBOGAZ
PUBLIC JOINT STOCK COMPANY

MTDA-3.0-10.4-MP-U2. ACS mnemonic diagram. “Timofeyevka” field, Ukraine. Since 2010.

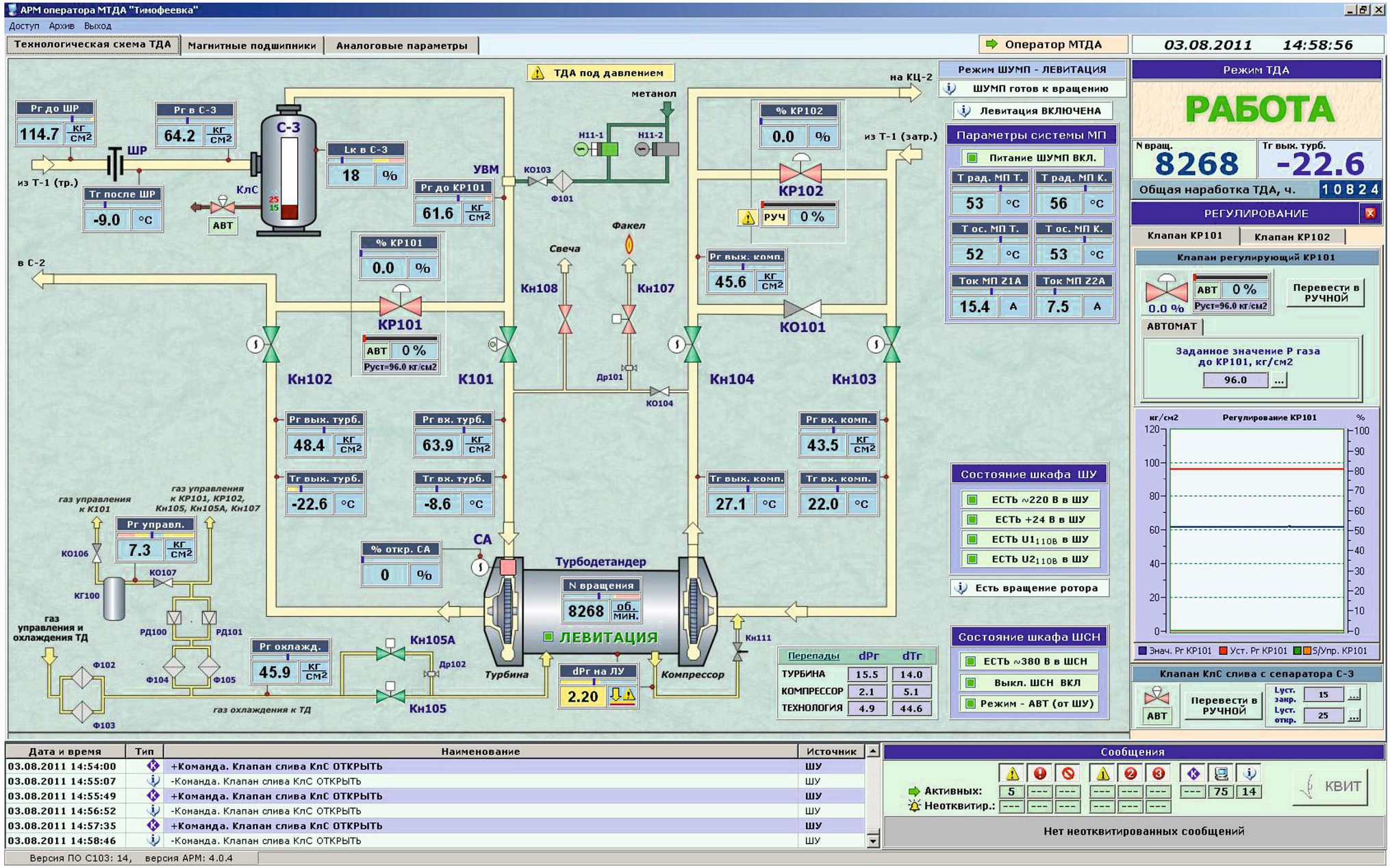

TURBOGAZ
PUBLIC JOINT STOCK COMPANY

UDEU-2500-U2. Power recycling expander unit.
Cold generation in low-temperature adsorption system with simultaneous power generation.
GS “Soloha”, Ukraine, 2009.

Name	Country	Start year, aver.runtime, h	Q, mln.m^3/day	Capacity, kW	Number of supplied units	Pin, Mpa	Pout, MPa	Du in, mm	Du out, mm	Reduction gear (a, n/a)
UDEU-2500-U2. GS, Soloha, Ukraine. HID “Potavagazdobycha”,	Ukraine	2009 28453 h.	4,2	2500	1	5,4	3,1	200	300	n/a

TURBOGAZ
PUBLIC JOINT STOCK COMPANY

Turbo-expander units production process.

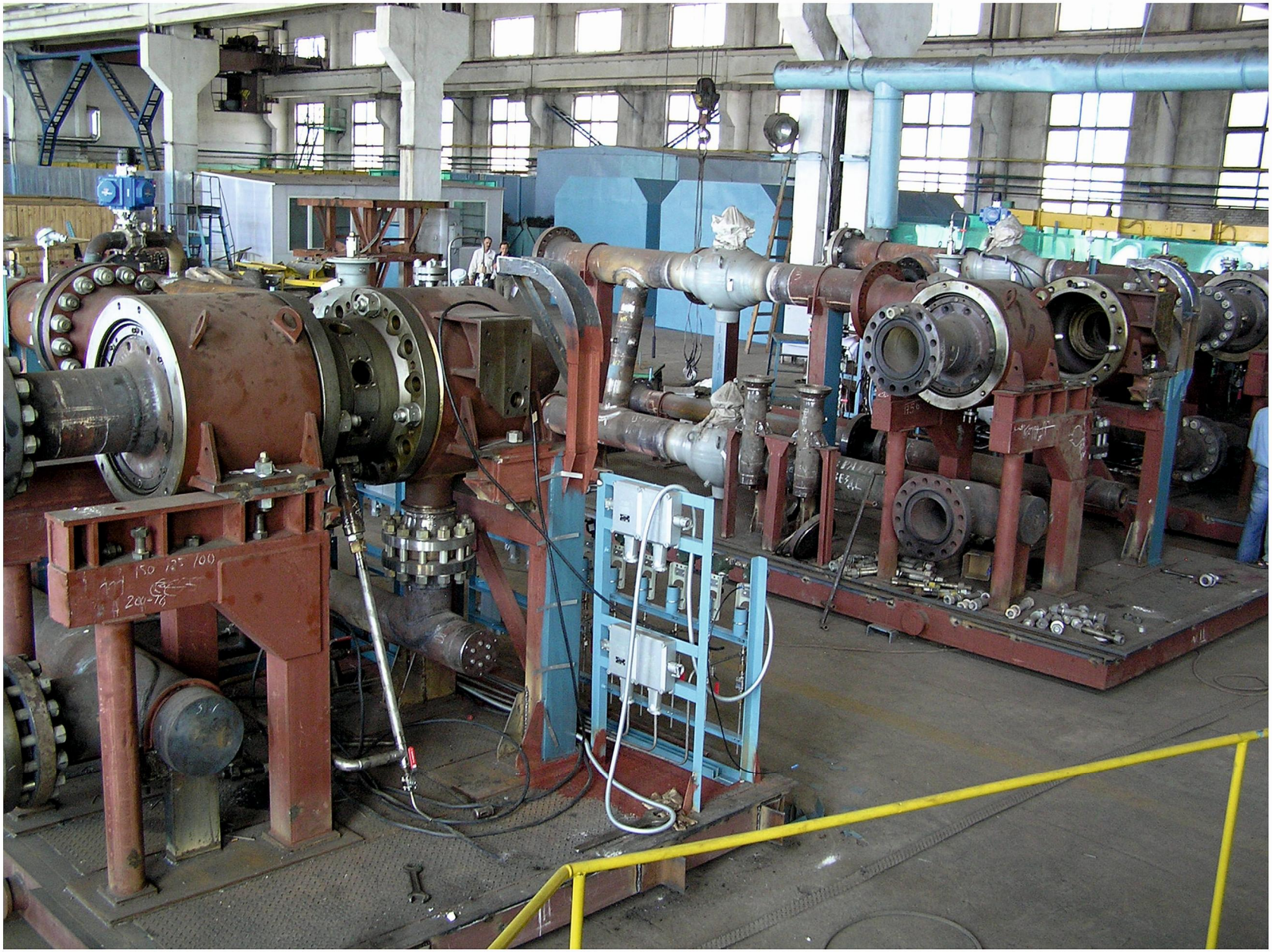

TURBOGAZ
PUBLIC JOINT STOCK COMPANY

Gas-dynamic full-scale testing process at the Proving Range PJSC “Turbogaz”

TURBOGAZ
PUBLIC JOINT STOCK COMPANY

Advantages of Turbo-Expander Units Produced by PJSC “Turbogaz”.

Advantages of UTDU and NTDA produced by PJSC “Torbogaz”:

-Individual approach to every project, i.e., UTDU and NTDA design and production apply directly to the running conditions of a specific site;

-Equipment could be supplied in different configurations depending on Customer's requirements;

-NTDA supplied together with valves set, necessary cables, ACS, static frequency converter (SFC), etc. ;

-Supply time is reduced;

-Wide range of equipment applications as regards climatic conditions, productivity, capacity;

-Wide range of support services (engineering, Feasibility Study development, supervised installation, start-up and commissioning, Customer's staff training, warranty and post-warranty servicing, spare parts supply);

-Quick response to Customers calls regarding their sites' visiting.

TURBOGAZ
PUBLIC JOINT STOCK COMPANY

Parameters of turbo-expander units in Gas treatment plants.
2002 – 2012 supply

Name	Gas cons., mln. m^3/d	Shaft power, kW	Start year, aver. runtime, h	Nuber of units (rotor bearing type)	Expander						Compressor					
					Pin, MPa	Pout Mpa,	Tin, °C	Tout, °C	Din, mm	Dout, mm	Pin, MPa	Pout, MPa	Tin, °C	Tout, °C	Din, mm	Dout, mm
MTDA-0.5-4.0-MP-U2 Chutovo field, Poltavagazdobycha, Ukraine	0,49-0,31	160	2009 34425 h.	1 (AMB)	4,2-4,0	2,55-2,45	-5...5	-30...-25	200	200	2,5-2,3	3,0	-15...0	5...22	200	200
MTDA-0.5-3.8-MP-U2 Sh.Poltava field, Poltavagazdobycha, Ukraine	0,585-0,387	124	2009 30471 h.	1 (AMB)	3,88	2,9-3,2	-23...-14	-30	200	200	2,79-3,0	3,15-3,3	-6	0...30	200	200
MTDA-0.6-4.5-MP-U2 Abazovka field, Poltavagazdobycha, Ukraine	0,62-0,38	186	2009 30541 h.	1 (AMB)	4,5	2,95	-10...-5	-30...-25	200	200	2,8-2,7	3,5-3,4	5...15	20...23	200	200
MTDA-0.8-4.4-MP-U1 ****Agreement signed	0,8	390		(AMB)	4,4	2,4	19	-15	100	150	2,3	3,2	2	28,25	150	150
MTDA-1.2-3.2-MP-U2 Mashevka field, Poltavagazdobycha, Ukraine	1,2-0,76	185	2009 35272 h.	1 (AMB)	3,2	2,56	-17...-15	-29...-25	200	300	2,5-2,3	2,8-2,6	1...30	10...40	300	300
NTDA-2.4-6.4-UHL2 Yulievskiy field, Kharkovgazdobycha, Ukraine	2,4	884	2003 77490 h.	1 (SB)	6,4	3,24	-27,7	-60,3	200	200	3,2	3,7	41,0	59,6	300	300
NTDA-2.4-6.4-UHL4 Kotelva field, Poltavagazdobycha, Ukraine	2,7-1,5	413	2004 64614 h.	1 (SB)	5,5-6,4	3,0-4,0	0...-30	-40...-70	200	200	2,8..3,8	3,0...4,5	40	60	300	300
MTDA-2.9-6.8-MP-U1. “Shurtan” field, Uzbekistan	2,9	675,5	2011 7077 h.	2 (AMB)	6,9	4,997	10,0	-10	200	300	4,797	5,6	24	38	300	300
MTDA-2.9-6.8-MP-U1. “Pamuk” field, Uzbekistan	2,9	675,5	2008 35408 h.	4 (AMB)	6,94	5,0	8,0	-10	200	300	4,75	5,55	41,0	54,4	300	300
MTDA-2.9-6.8-MP-U1 Zevardy field, Uzbekistan	2,9	675,5	2008 37847 h.	4 (AMB)	6,94	5,0	8,0	-10	200	300	4,75	5,55	41,0	54,4	300	300
TDA-2.9-6.8-U1 Kokdumalak field Uzbekistan	2,9	675,5	2006 52522 h.	1 (SB)	6,94	5,0	8,0	-10	300	300	4,75	5,55	41,0	54,4	300	300
MTDA-2.9-6.8-MP-U1 Zevardy field, Uzbekistan	2,9	675,5	2012 8158 h.	1 (AMB)	6,9	4,997	10,0	-10	200	300	4,75	5,55	41,0	54,4	300	300
MTDA-2.9-6.8-MP-U1 Umid field, Uzbekistan	2,9	675,5	2012 7007 h.	1 (AMB)	6,9	4,997	10,0	-10	200	300	4,75	5,55	41,0	54,4	300	300
MTDA-2.9-6.8-MP-U1 Kemachi field, Uzbekistan	2,9	675,5	2012 3332 h.	1 (AMB)	6,9	4,997	10,0	-10	200	300	4,75	5,55	41,0	54,4	300	300
MTDA-2.9-6.8-MP-U1 Kultak field, Uzbekistan	2,9	675,5	2012 5103 h.	1 (AMB)	6,9	4,997	10,0	-10	200	300	4,75	5,55	41,0	54,4	300	300
MTDA-3.0-10.4-MP-U2. “Timofeyevka” field, Ukraine	3,3-2,1	1162	2010 23809 h.	1 (AMB)	10,1-8,1	5,1	9...-5	-30	200	300	4,9	5,7	5...15	20...30	300	300
TDA-4.0-3.0-1-U2. Krestische field, Ukraine	4	1460,5	2004 59786 h.	3 (RB)	3,11	2,7	13,5	6,8	300	300	2,38	2,62	38,0	42,4	300	300
TDA-4.9-6.8-U1 Kokdumalak field Uzbekistan	4,9	1091	2006 55261 h.	4 (SB)	6,94	5,0	8,0	-10	300	300	4,75	5,55	41,0	54,4	300	300

TURBOGAZ
PUBLIC JOINT STOCK COMPANY

Name	Gas cons., mln. m³/d	Shaft power, kW	Start year, aver. runtime, h	Nuber of units (rotor bearing type)	Expander						Compressor					
					Pin, MPa	Pout, MPa	Tin, °C	Tout, °C	Din, mm	Dout, mm	Pin, МПа	Pout, МПа	Tin, °C	Tout, °C	Din, mm	Dout, mm
*** "Neftegazdeposit" LLC, "Kultak", Uzbekistan	5,0	1110		1 (AMB)	6,9	4,997	10	-10	300	300	4,9	5,6	23,6	38,0	300	300
*** "Neftegazdeposit" LLC, "Alan", Uzbekistan	5,0	1110		4 (AMB)	6,9	4,997	10	-10	300	300	4,9	5,6	23,6	38,0	300	300
UDEU-2500-U2 "Shidna Poltava" field, Ukraine	5,5-3	2168	2009 31141 h.	1 (SB)	5,0-5,5	2,7-3,5	-4...+8	-30...-20	200	300	Generator of 2.5 MW capacity					
*****MTDA-6.25-16.0-MP-U1. Tender under way	6,25	1800		(AMB)	13,76	6,86	-4,13	-40	200	200	10,4	13,91	20,82	43,55	200	200
** MTDA-8.0-12.6-MP-UKHL4. Promavtomatica, Russia	8	3200		3 (AMB)	16,94	8,5	17	-22,5	200	200	12,58	17,1	35,4	61	200	200
NTDA-9.0-4.5-MP-U1. "Shurtan" field, Uzbekistan	8,9	2100	2012 4027 h.	1 (AMB)	4,6	2,7	-52,4	-77	300	400	2,5	3,0	40	55,6	500	500
NTDA-9.0-4.5-U1. "Shurtan" field, Uzbekistan	9,0	2054	2007 32768 h.	1 (AMB)	4,44	2,69	-53,7	-75,2	300	400	2,49	2,9	38,5	52,3	500	500
"Uztashkineftgas" JSC, MGPZ, Uzbekistan	11,5	3330	2012 1127 h.	1 (AMB)	6,85	3,04	-44,7	-81,3	300	400	3,0	3,5	42,8	63,8	500	500
****** MTDA-11.0-10.0-MP-U1. Project designed for Russia	10,93	3000		(AMB)	8,88	5,238	5,9	-27	250	300	4,988	6,88	-19,4	6,2	350	300
****** MTDA-12.0-16.0-MP-U1. Project designed for Russia	11,5	2250		(AMB)	13,57	9,1	30	4	250	300	10,86	13,6	29,0	48,8	300	250
****** MTDA-20.0-10.0-MP-U1. Project designed for Iran	20	1914		(AMB)	9,32	8,24	0	-8,12	400	400	8,16	8,75	20,1	26,11	450	450
****** MTDA-27.5-10.0-MP-U1. Project designed for UzbekistanIran	27,5	2632		(AMB)	9,32	8,24	0	-8,12	400	450	8,16	8,7	20,1	26,11	500	450
****** MTDA-40.0-10.0-MP-U1. Project designed for Turkmenistan	40,0	3828		(AMB)	9,32	8,24	0	-8,12	500	500	8,16	8,75	20,1	26,11	550	550

* - under construction
** - shipment under way
*** - commissioning under way
**** - contract signed
***** - tender procedures under way
****** - project developed
(AMB) – active magnetic bearing
(RB) – rolling bearing
(SB) – sleeve bearing

PUBLIC JOINT STOCK COMPANY

TURBOGAZ

61003, Ukraine, Kharkiv, Dubovogo lane, 6/4
tel./fax: +38 057 731 45 54
e-mail: turbogaz@ukr.net,
oao@turbogaz.kharkov-ua.com
http://www.turbogaz.com.ua